MEM Bath cascade spout for wall mounting - Chrome

13 430 730

- 220mm projection
- cascade
- plate 78 mm x 192 mm
- 1/2" connection
- plug-link mounting
- max. flow 26.5 l/min at 3 bar flow pressure

Recommended miscellaneous

Concealed wall elbow - 35 085 970 90
●max. recess depth mm
●min. recess depth mm

MEM Bath cascade spout for wall mounting - Chrome

MEM

13 430 730

mm [inches]

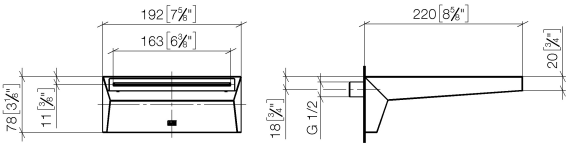

Flow rate chart

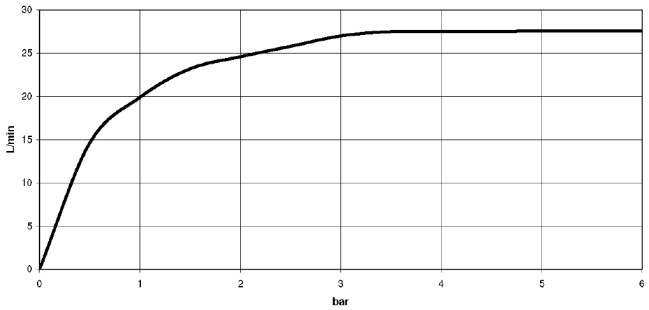

Trajectory diagram

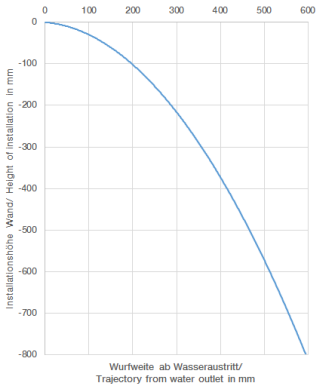

Codes & Standards

ASME A112.18.1	cUPC	DIN 4109	ISO 3822

Ü-Zeichen

MEM Bath cascade spout for wall mounting - Chrome

13 430 730

Certificates

IAPMO_4976	LGA_19

MEM Bath cascade spout for wall mounting - Chrome

13 430 730

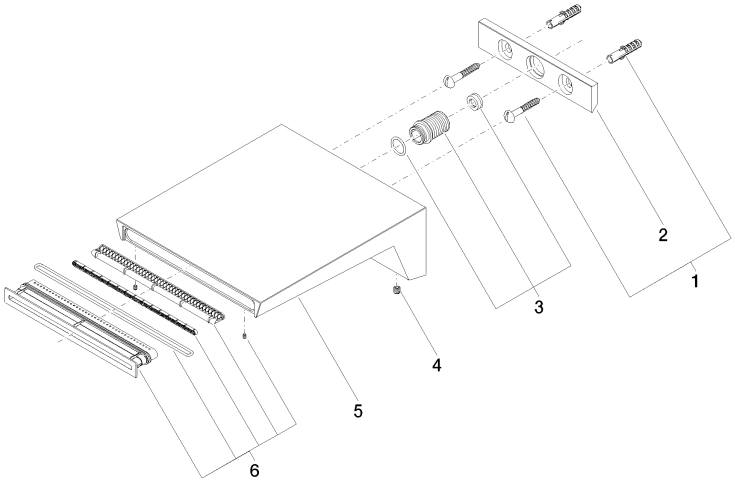

Spare parts list

No.	Item Number	Name	Quantity used	Delivery time
1	04 30 31 024 01 90	fixing set	1	2
2	09 17 97 056 90	holder	1	2
3	90 24 05 008 00 90	nipple set	1	2
4	09 31 11 049 90	pin	2	2
5	09 11 73 002-00	spout	1	60
6	90 29 03 059 00 90	insert	1	2
9	09 14 10 199 90	seal	1	2

We reserve the right to change designs, product range and technical specifications without prior notice.
More information can be found at: www.dornbracht.com +49 (0) 2371 8899 900 mail@dornbracht.com